BIJOU™

luxury living, timeless design

Contemporary living is at the heart of our approach to sophisticated bathroom concepts, and **BIJIOU** is a collection entirely inspired by modern people. This is the ultimate combination of elegance and innovation, setting new standards in durable quality and celebrating individual vision and choice through a wide range of styles and designs. We are proud to bring you **BIJIOU** – contemporary classism in your home.

VERSION 6

content

sanitary ware collection

- basin & vanity range
- toilet range
- bath range

tap collection

- freestanding range
- mixer range
- kitchen range

accessories collection

- shower rose range
- bathroom accessories range
- angle valves range
- basin/ bath waste range

sanitary ware collection

adaptable, durable, exquisite.

The **BIJIOU** sanitary ware collection of uniquely styled pieces with a silky finish and layers of lustre that last longer. The smooth curves that stylistically compliment the modern bathroom, has been brought to you with the subtle sexiness and bold lines that personify your personality. Turning your bathroom into your serenity.

basins & vanities

BIJIOU

désir

code: BWF0030

description: freestanding basin.

measurements: 390mm x 380mm x 135mm

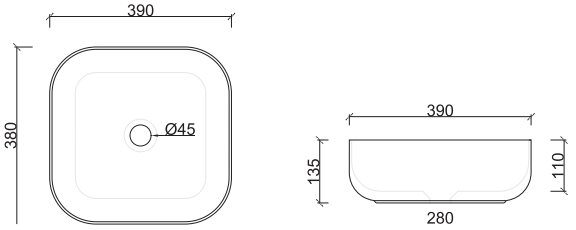

rêve

code: 210200

description: freestanding basin.

measurements: 400mm x 400mm x 150mm

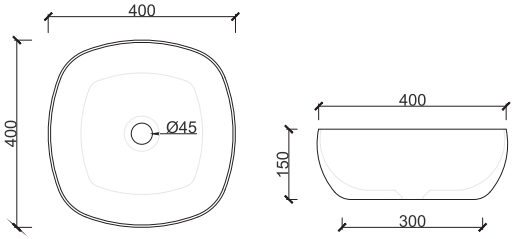

paradis

code: BWF0032

description: freestanding basin.

measurements: 605mm x 400mm x 140mm

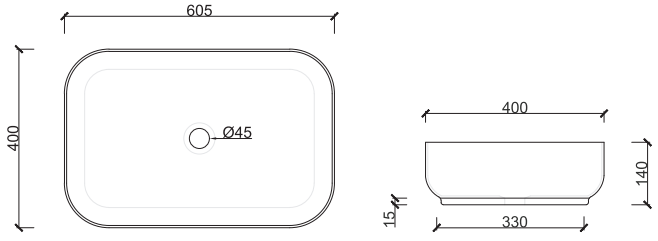

BIJIOU

devin

code: BWF0029

description: freestanding basin.

measurements: 610mm x 400mm x 150mm

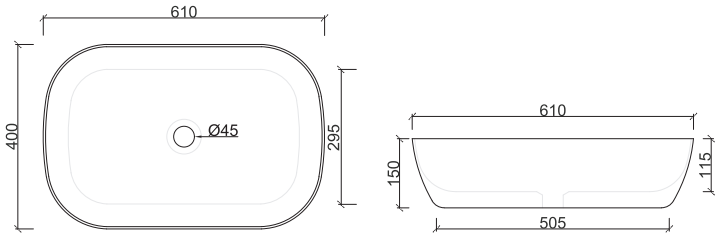

envié

code: 210201

description: freestanding basin.

measurements: 490mm x 395mm x 145mm

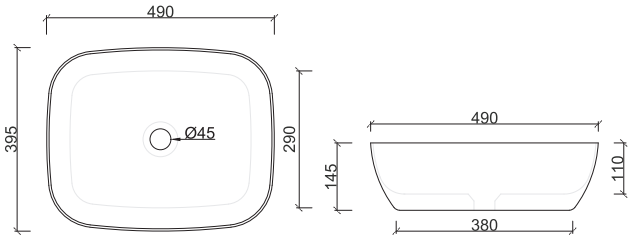

lucide

code: 211223

description: freestanding basin.

measurements: 125mm x 555mm x 420mm

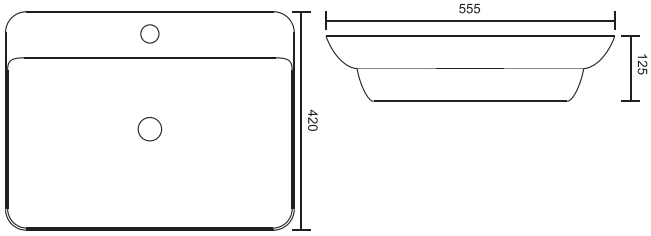

BIJIOU

ruse

code: 211222

description: freestanding basin.

measurements: 125mm x 425mm x 425mm

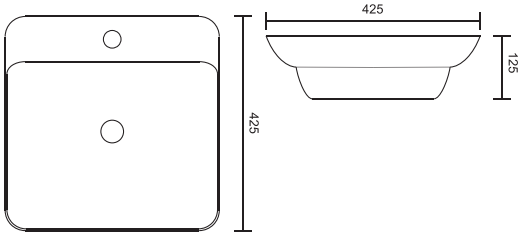

résonner

code: 210758

description: underslung basin.

measurements: 500mm x 360mm x 145mm

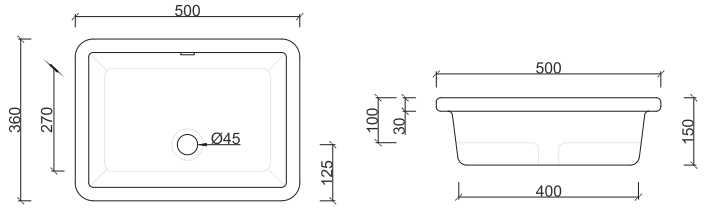

platine

code: 210756

description: underslung basin.

measurements: 530mm x 340mm x 170mm

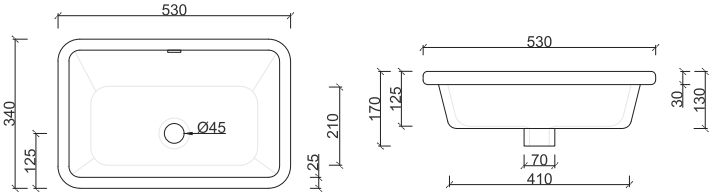

peluche

code: 210759

description: underslung basin.

measurements: 710mm x 295mm x 145mm

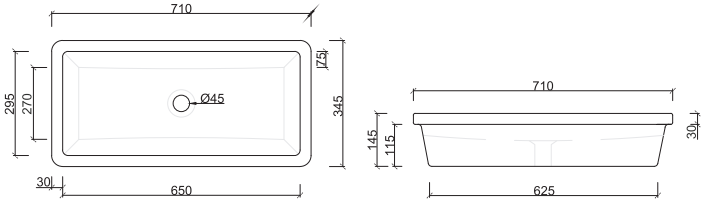

BIJIOU

dēva

code: 211113

description: single draw wall-mount
vanity cabinet
white pvc wrapped cabinet
with slimline resin basin

measurements: 450mm x 500mm x 480mm

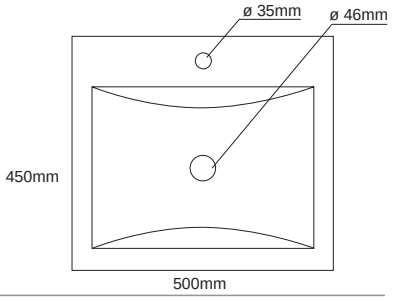

jolie

code: 211114

description: single draw wall-mount
vanity cabinet
white pvc wrapped cabinet
with slimline resin basin

measurements: 412mm x 607mm x 480mm

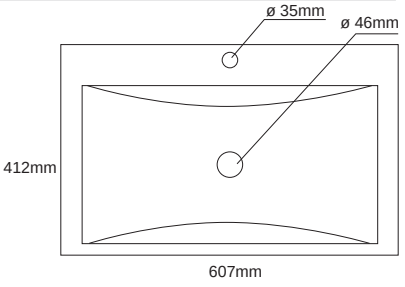

charme

code: 211115

description: single draw wall-mount
vanity cabinet
white pvc wrapped cabinet
with slimline resin basin

measurements: 460mm x 800mm x 475mm

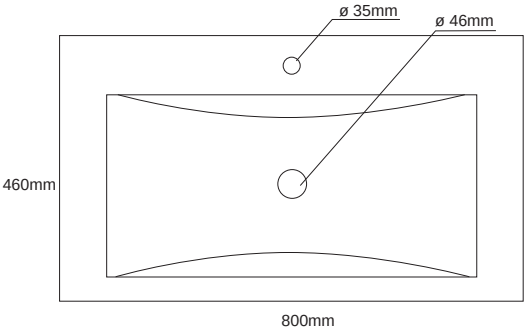

code: 211116

description: single draw wall-mount
vanity cabinet
white pvc wrapped cabinet
with slimline resin basin

measurements: 460mm x 1200mm x 475mm

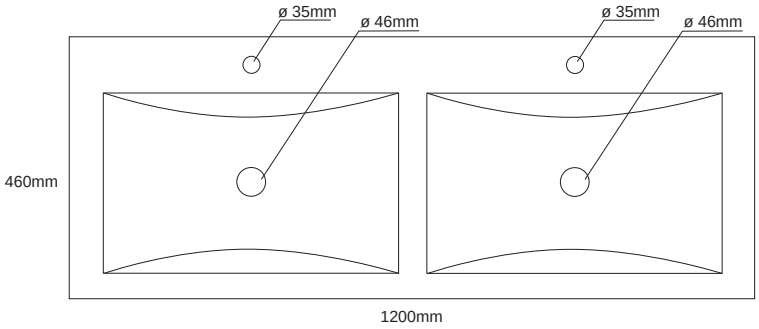

items marked with "*" are only sold in specific branches

toilets

BIJIOU

opale

code: 210168

description: wall hung pan, includes soft close toilet seat.

measurements: 570mm x 355mm x 305mm

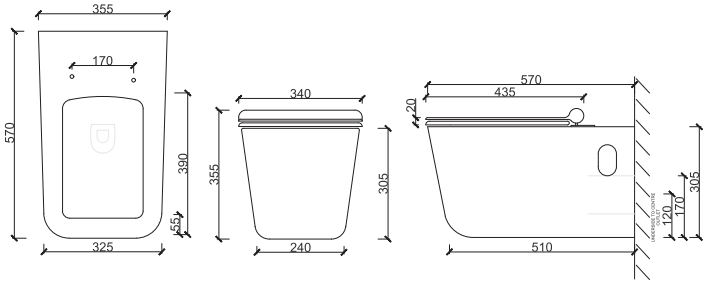

opale back to wall

code: 210424

description: back to wall pan, includes soft close toilet seat.

measurements: 560mm x 355mm x 400mm

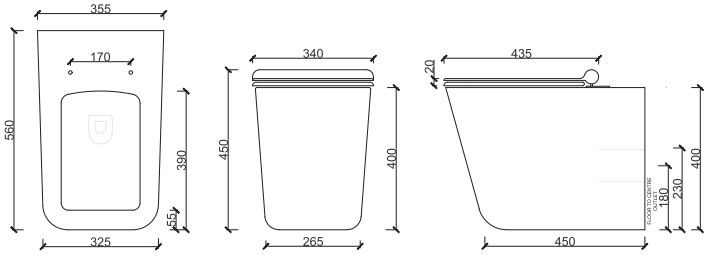

le rubis

code: 210167

description: close couple suite, includes flushing mechanism and soft close toilet seat.

measurements: 660mm x 350mm x 810mm

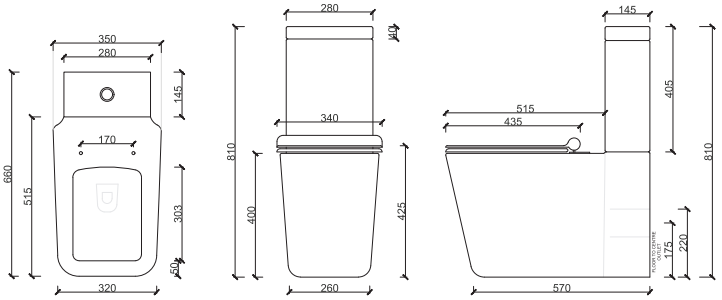

BIJOU

amour

code: 210165

description: wall hung pan, includes soft close toilet seat.

measurements: 565mm x 335mm x 335mm

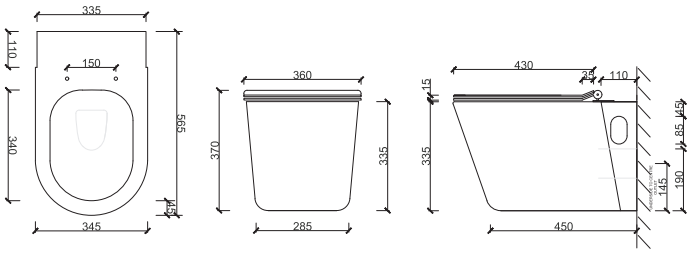

amour back to wall pan

code: 210423

description: back to wall pan, includes soft close toilet seat.

measurements: 555mm x 335mm x 410mm

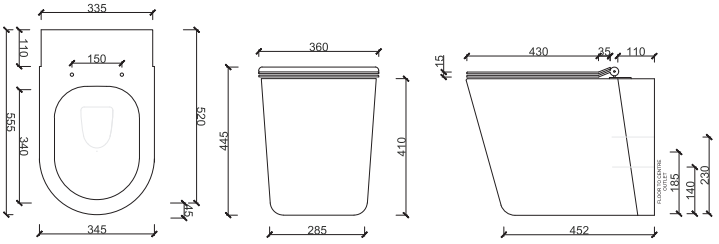

piquant

code: 210164

description: close couple suite, includes flushing mechanism and soft close toilet seat.

measurements: 715mm x 360mm x 805mm

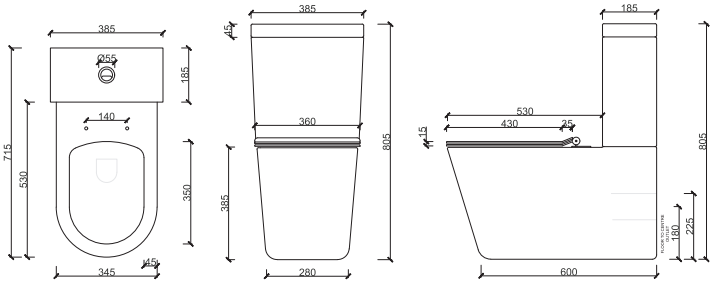

BIJIOU

baths

BIJIOU

cannes

code: BJ6518

description: acrylic freestanding bath, with rectangular overflow.

measurements: 1700mm x 790mm x 680mm

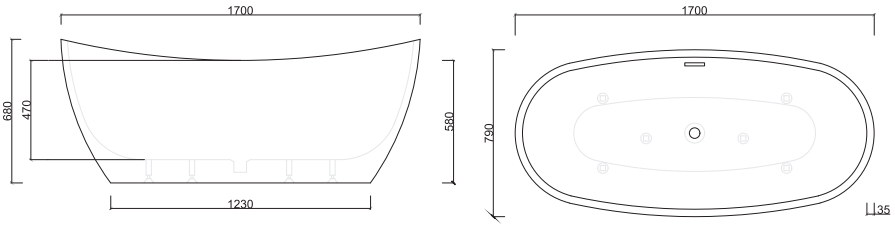

toulouse

code: BJ6517

description: acrylic freestanding bath, with rectangular overflow.

measurements: 1800mm x 780mm x 715mm

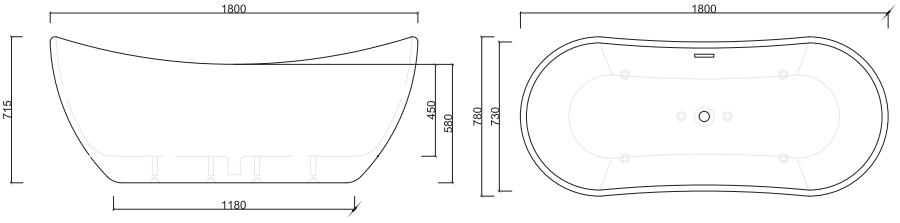

châteaux

code: BJ6815

description: acrylic freestanding bath, with rectangular overflow.

measurements: 1715mm x 815mm x 590mm

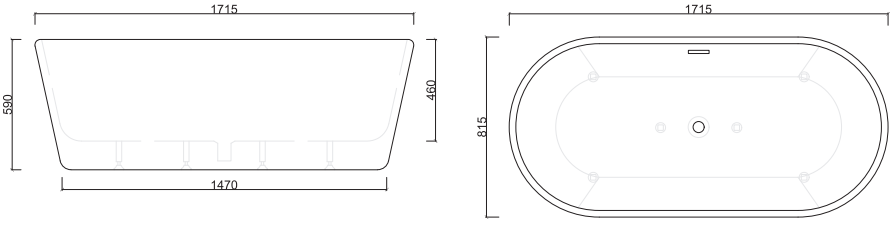

mont michel

code: BJ6813

description: acrylic freestanding bath, with rectangular overflow.

measurements: 1700mm x 795mm x 585mm

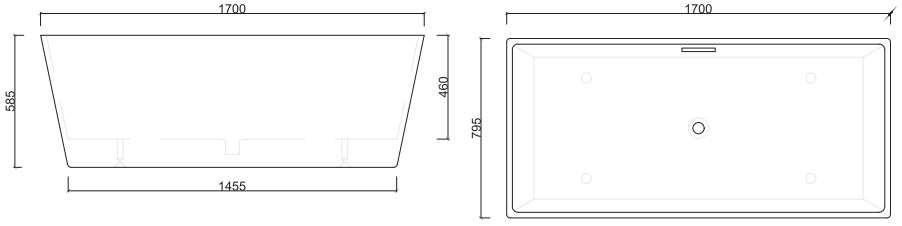

champagne

code: 211117

description: acrylic freestanding bath, with rectangular overflow.

measurements: 1700mm x 800mm x 580mm

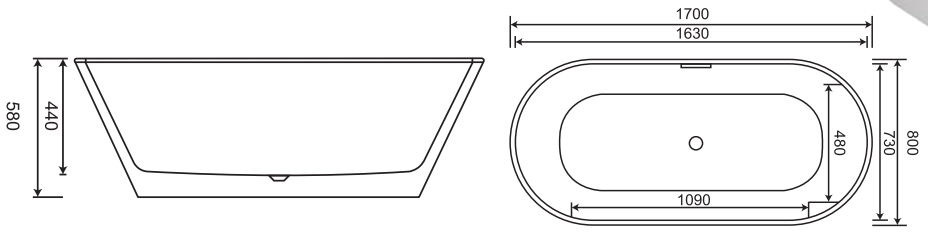

corsica

code: 211118

description: acrylic freestanding bath, with rectangular overflow.

measurements: 1700mm x 800mm x 600mm

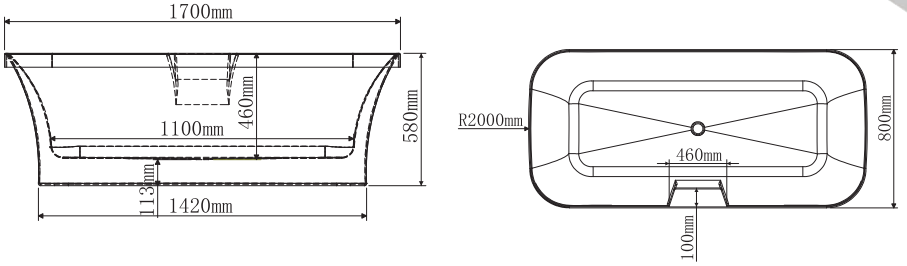

BIJIOU

black series

style emphasised

The **BIJIOU** black series collection, a range of baths in such high demand, emphasising the latest in design, ensuring your modern bathroom sets the latest trends. The new black series adds that hint of exclusivity.

le mans

code: BJ6519

description: black surround acrylic freestanding bath, with rectangular overflow.

measurements: 1700mm x 790mm x 680mm

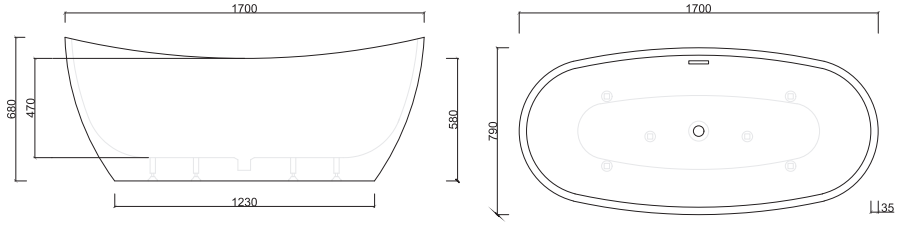

savoy

code: BJ6517BW

description: black surround acrylic freestanding bath, with round overflow.

measurements: 1800mm x 780mm x 715mm

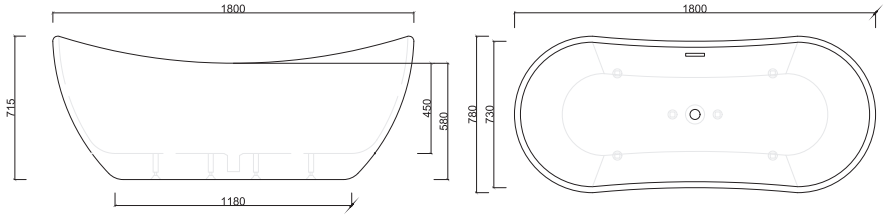

jura

code: BJ6813BW

description: black surround acrylic freestanding bath, with rectangular overflow.

measurements: 1700mm x 795mm x 585mm

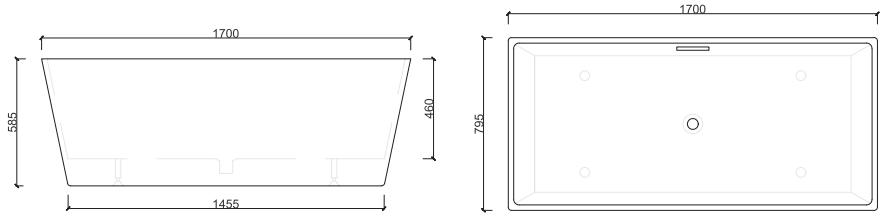

BIJIOU

tap collection

aesthetic appeal meets functionality

French - inspired minimalistic design exquisitely crafted from the finest materials makes for exceptional performance and durability that you have come to expect from **BIJIOU**. With a 12-year guarantee on manufacture defects, these distinctive designs deliver visual highlights with high quality finishes.

freestanding taps & mixers

BIJIOU

tanzanite freestanding tap

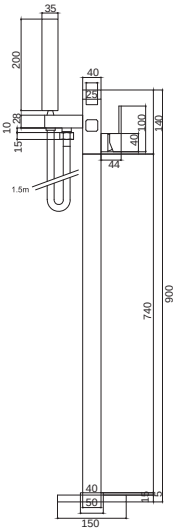

code: 210274

description: freestanding bath mixer with stantion & hand shower, chrome plated.

nova freestanding tap

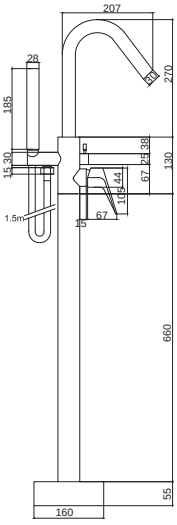

code: 210273

description: freestanding bath mixer with stantion & hand shower, chrome plated.

victorian freestanding tap

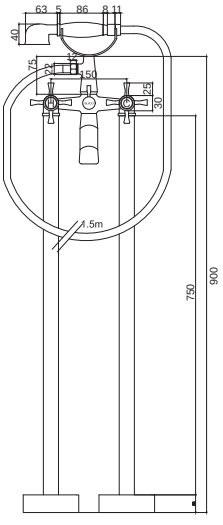

code: 210272

description: freestanding bath mixer with stantions & hand shower, chrome plated.

magnetite freestanding tap

code: 211134

description: freestanding bath mixer with stantion & hand shower, matt black finish.

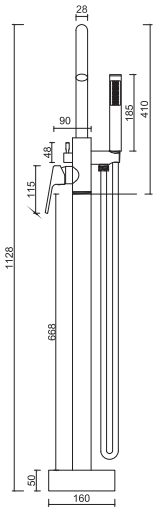

adour freestanding tap

code: CLB211126

description: freestanding bath mixer with stantions & hand shower, bronze finish.

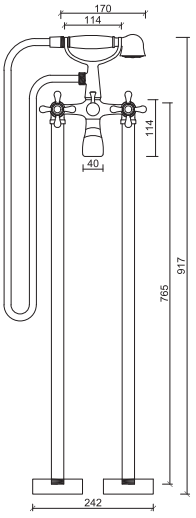

mixer range

BIJIOU

adour pillar tap

code: CLB211122

description: bronze pillar tap, basin - 15mm.

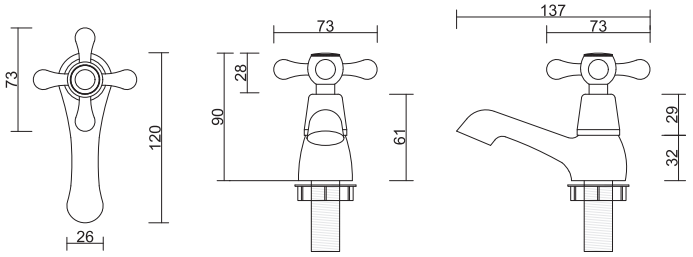

adour cast spout

code: CLB211181

description: bronze basin mixer cast spout.

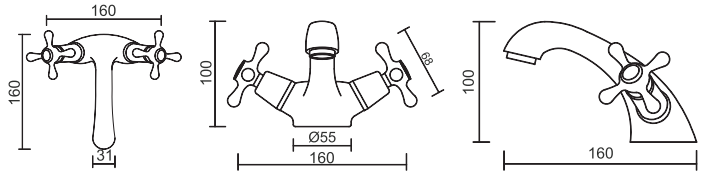

adour undertile

code: CLB211124

description: bronze undertile CxC, stop tap - 15mm.

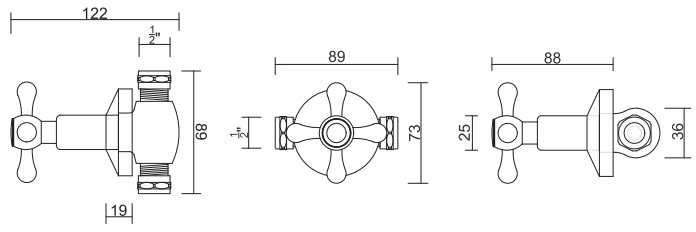

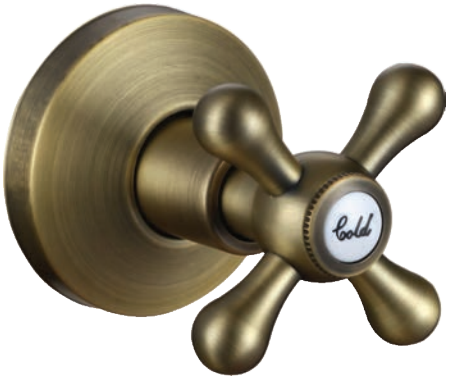

adour bath mixer

code:	CLB211123
description:	bronze bath mixer with hand shower & accessories.

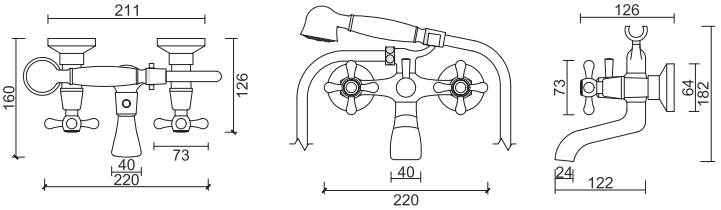

adour sink mixer

code:	CLB21125
description:	bronze sink mixer deck type with swivel spout.

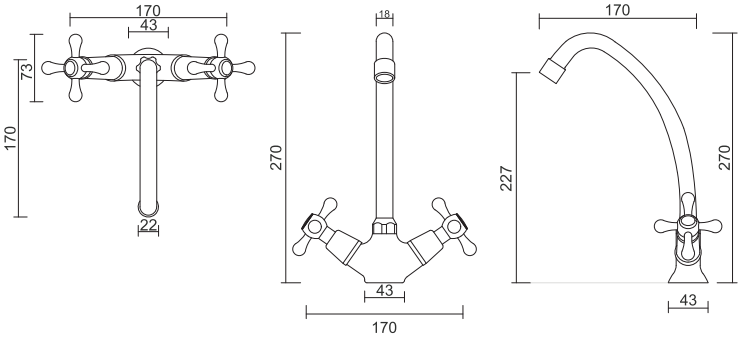

geneva basin mixer

code: BIJ211165

description: matt black & chrome basin mixer short body.

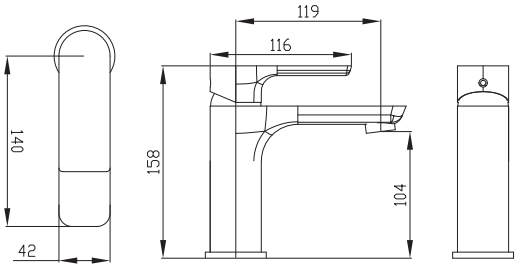

geneva basin mixer

code: BIJ211166

description: matt black & chrome basin mixer long body.

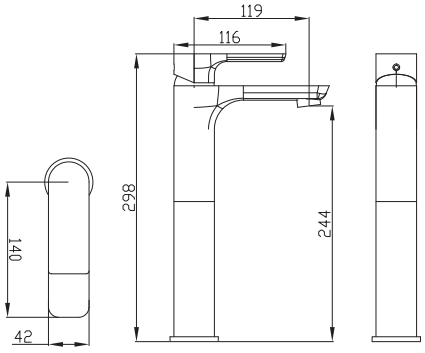

geneva undertile mixer

code: BIJ211168

description: matt black & chrome undertile shower or bath mixer.

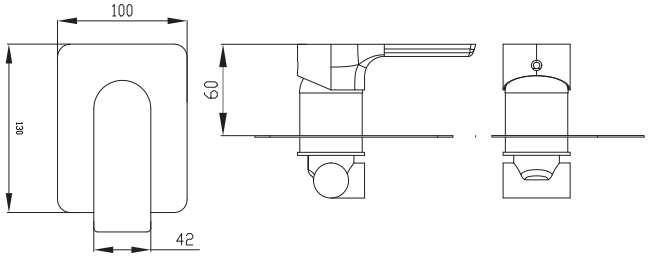

geneva basin spout mixer

code: BIJ211169

description: matt black & chrome basin spout mixer with cover plate.

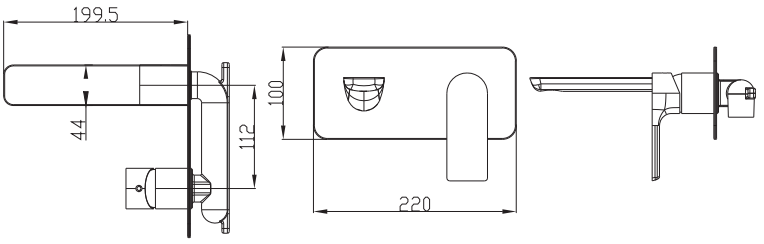

geneva sink mixer

code: BIJ211167

description: matt black & chrome sink mixer deck type.

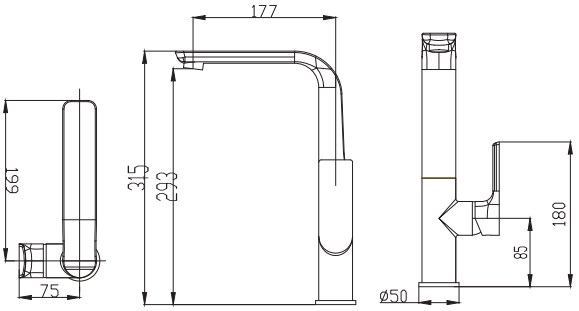

maine basin mixer

code: 211248

description: chrome
basin mixer short body.

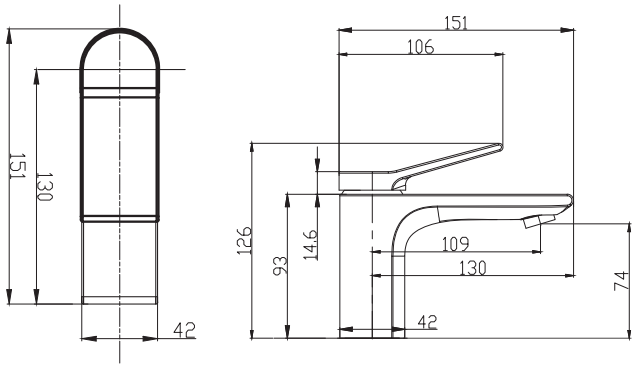

maine basin mixer

code: 211249

description: chrome
basin mixer long body.

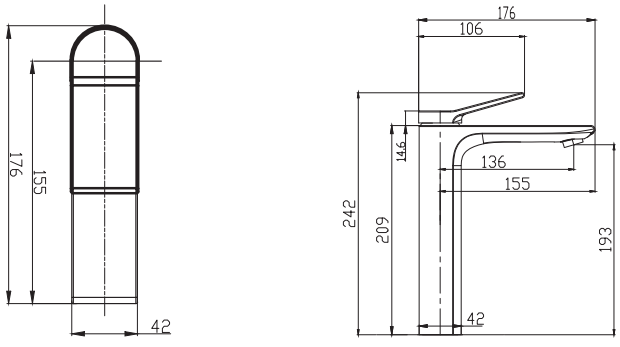

maine undertile mixer

code: 211251

description: chrome
undertile shower or
bath mixer.

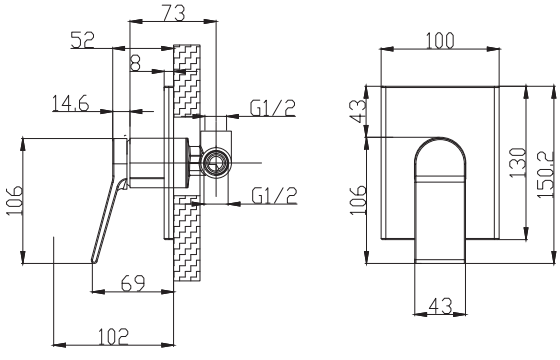

BIJIOU

maine basin spout mixer

code: 211252

description: chrome
basin spout mixer with
cover plate.

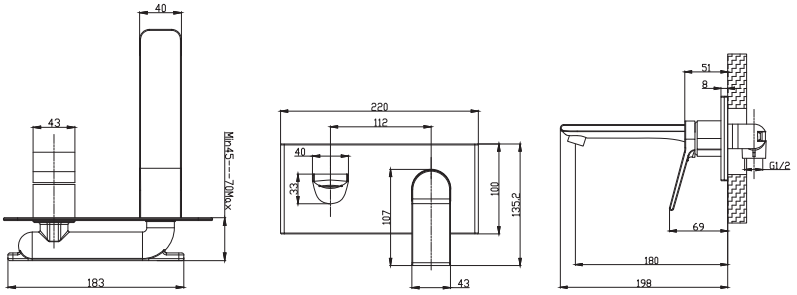

maine bath mixer

code: 211253

description: chrome
bath mixer with hand
shower &accessories.

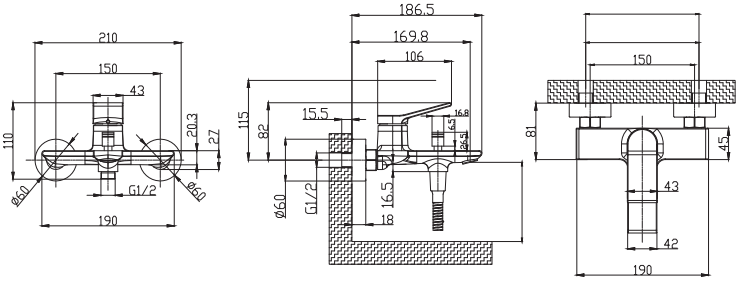

maine sink mixer

code: 211250

description: chrome
sink mixer deck type.

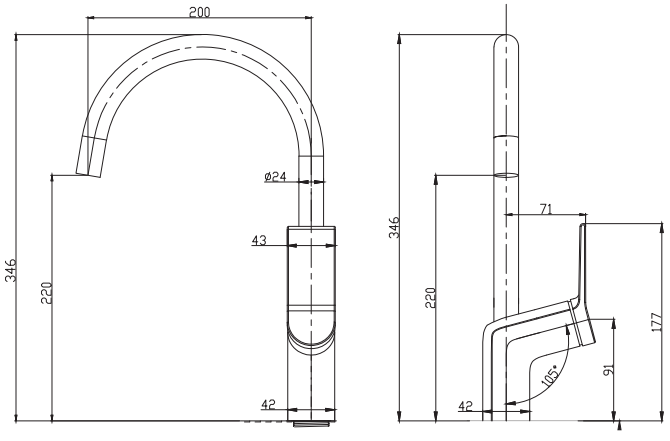

BIJIOU

kitchen mixers

BIJIOU

meuse

code: 210748

description: single lever pull-out kitchen mixer, stainless steel spring hose, chrome plated.

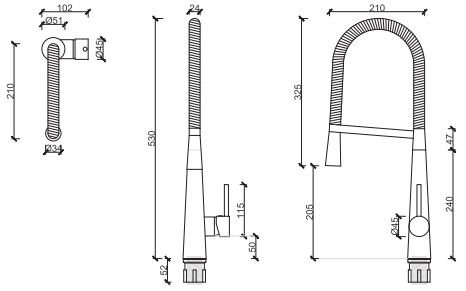

vilaine

code: 210749

description: single handle pull-out kitchen sink mixer, black silicone hose, chrome plated.

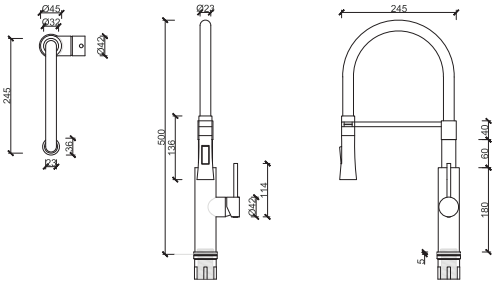

cher

code: 210750

description: single handle kitchen sink mixer, matt black finish.

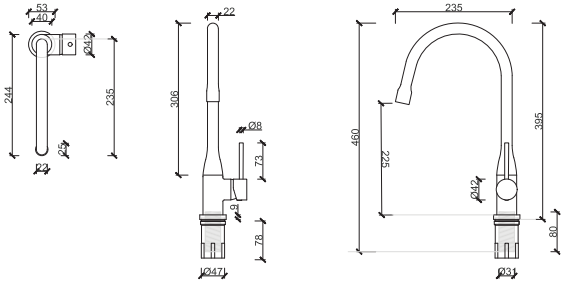

BIJIOU

selune

code: 210751

description: single handle pull-out kitchen sink mixer, black silicone hose, chrome plated.

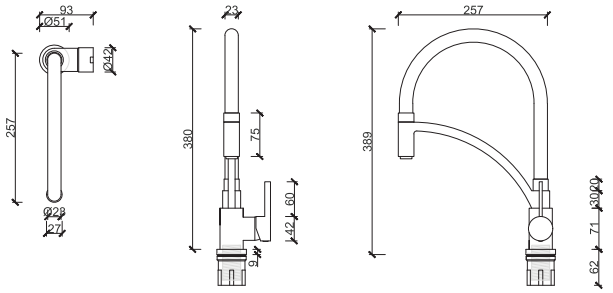

epte

code: 210752

description: single handle pull-down kitchen sink mixer, 500mm retractable inlet hose, chrome plated.

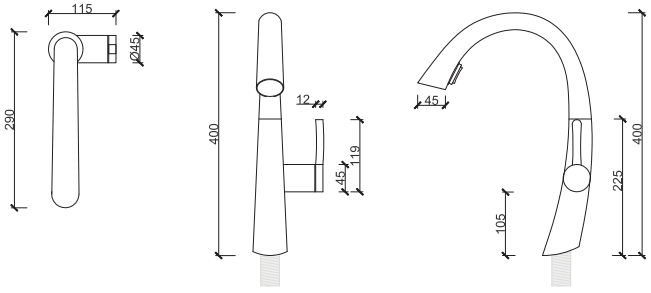

accessories collection

precision in the finishing touches.

Our highly refined range of showerheads and arms are made from globally sourced, premium-grade materials to offer a choice of class-leading design styles that can be seamlessly integrated into your style world.

de la lance

code: BIJ211141

description: round matt black shower rose.

measurements: 200mm Ø

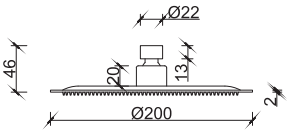

du ray-pic

code: BIJ211142

description: square matt black shower rose.

measurements: 200mm x 200mm

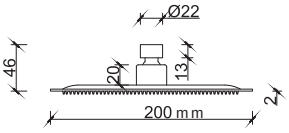

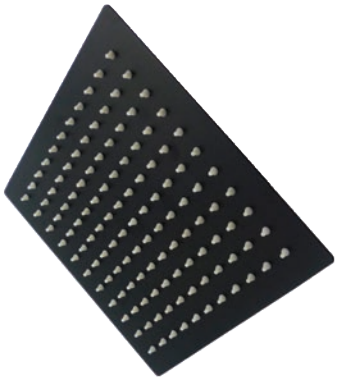

shower arm

code: 211150

description: round matt black shower arm.

measurements: 400mm

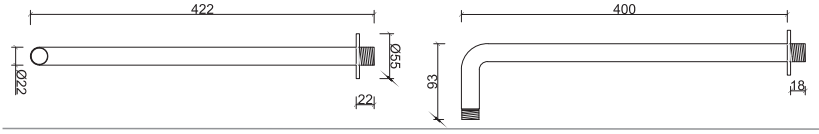

shower arm

code: 211149

description: square matt black shower arm.

measurements: 400mm

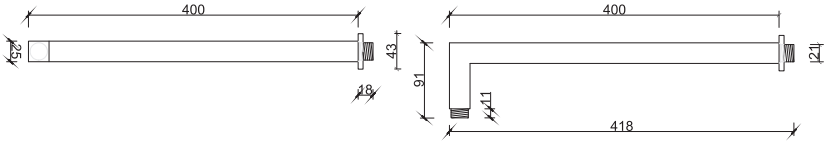

BIJIOU

la pucelle d'angon

code: BIJ21121

description: matt black shower rose including shower arm.

measurments: 490mm x 200mm Ø

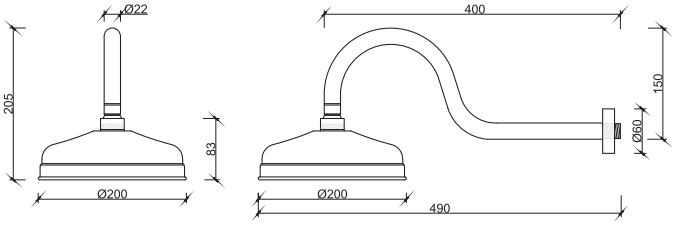

de flumen

code: BIJ21120

description: chrome shower rose including shower arm.

measurments: 490mm x 200mm Ø

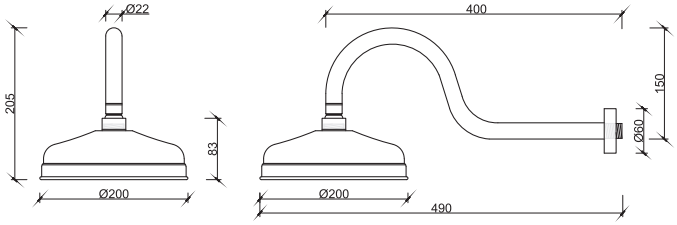

de flumen

code: BIJ21122

description: bronze shower rose including shower arm.

measurments: 490mm x 200mm Ø

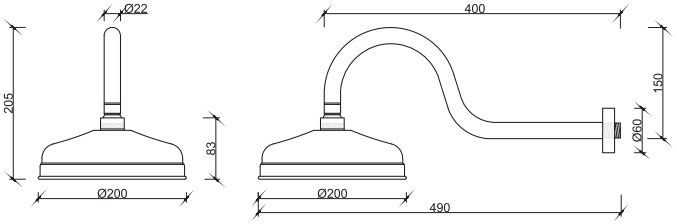

gourette

code: 210463

description: single function shower rose complete with shower arm.

measurements: 550mm x 230mm

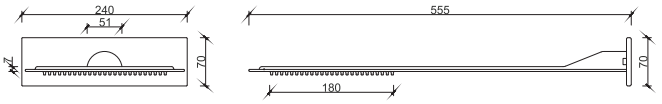

bathroom accessories

BIJIOU

clermont single towel rail

code: 211171

description: matt black single rail, solid brass.

measurements: 610mm

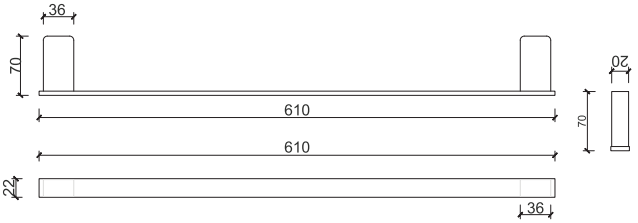

clermont double towel rail

code: 211172

description: matt black double towel rail, solid brass.

measurements: 610mm

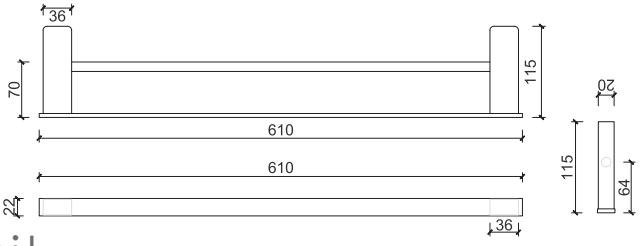

clermont hand towel rail

code: 211173

description: matt black hand towel rail, solid brass.

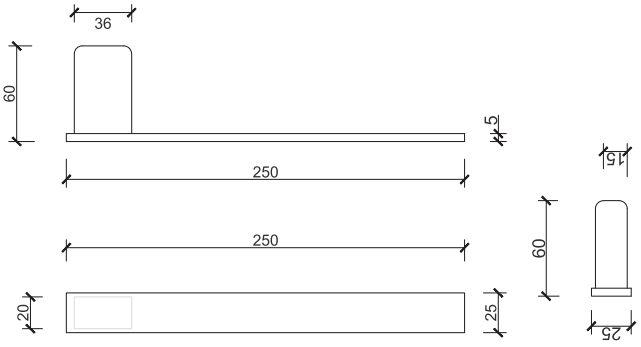

clermont robe hook

code: 211176

description: matt black robe hook, solid brass.

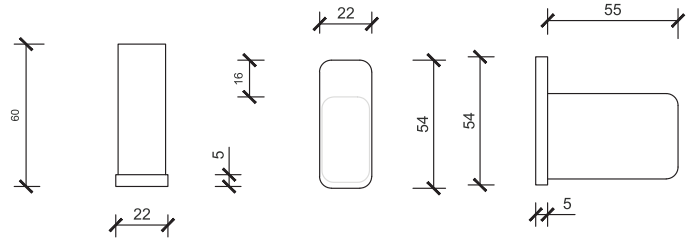

clermont toilet roll holder

code: 211177

description: matt black toilet roll holder, solid brass.

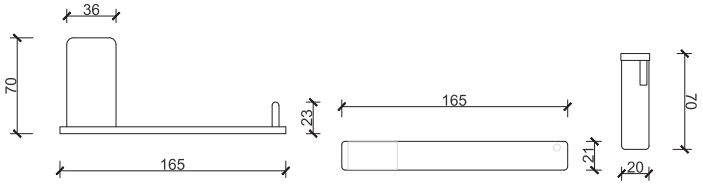

clermont soap dish

code: 211182

description: matt black soap dish, solid brass.

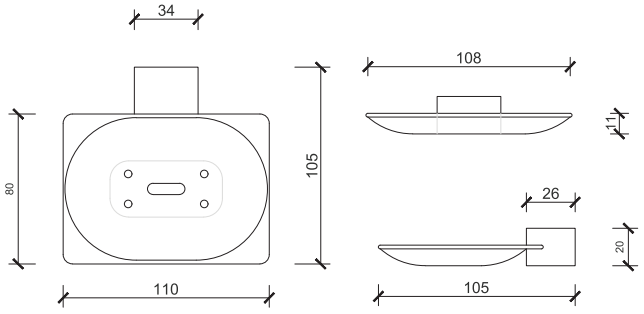

clermont tumbler holder

code: 211175

description: matt black tumbler holder, solid brass.

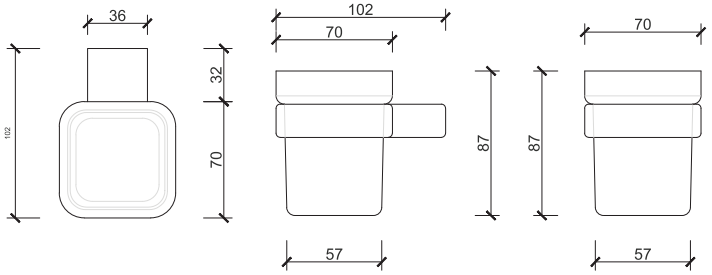

clermont toilet brush holder

code: 211174

description: matt black toilet brush & holder, solid brass.

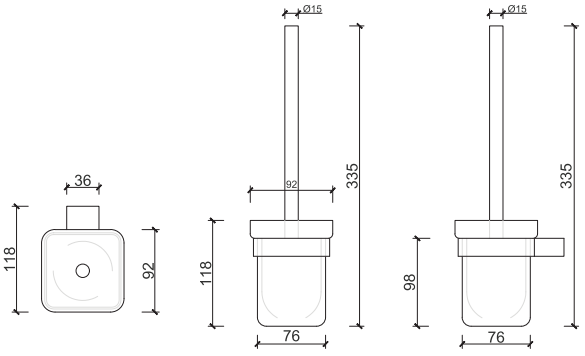

BIJIOU

rhône single towel rail

code: 210760

description: single towel rail, solid brass, chrome plated.

measurements: 610mm

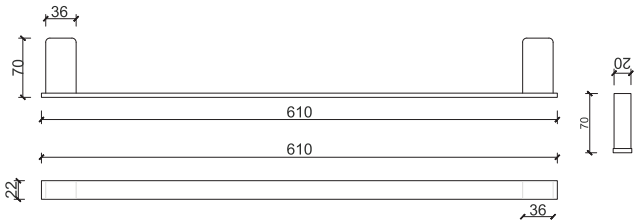

rhône double towel rail

code: 210761

description: double towel rail, solid brass, chrome plated.

measurements: 610mm

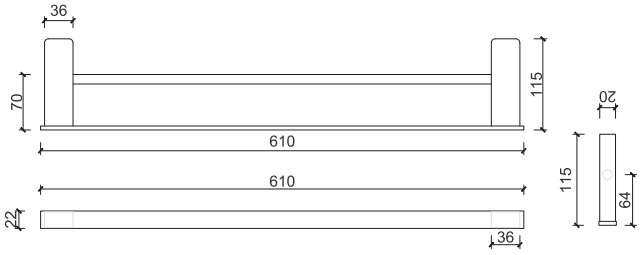

rhône double towel rail

code: BIJ211127

description: double towel rail, solid brass, chrome plated.

measurements: 900mm

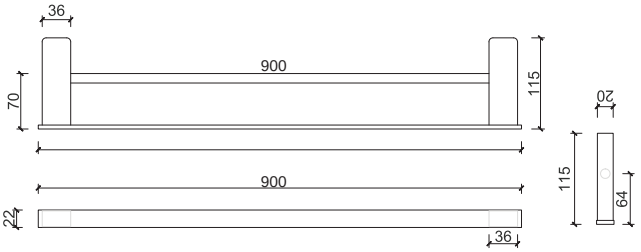

rhône hand towel rail

code: 210762

description: towel rail, solid brass, chrome plated.

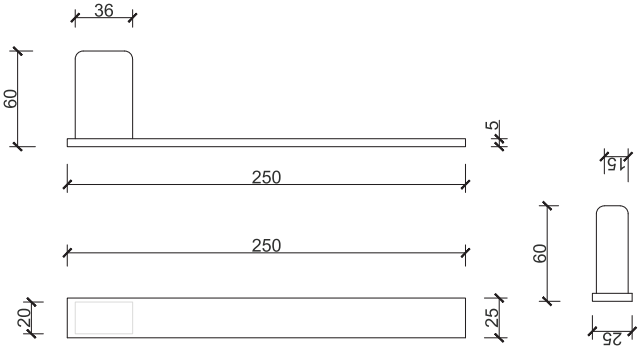

rhône robe hook

code: 210766

description: robe hook, solid brass, chrome plated.

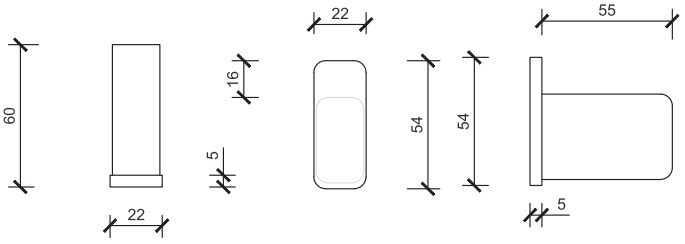

rhône toilet roll holder

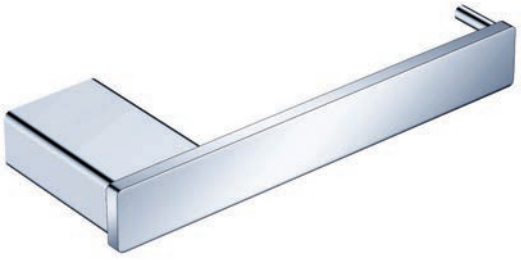

code: 210767

description: toilet roll holder, solid brass, chrome plated.

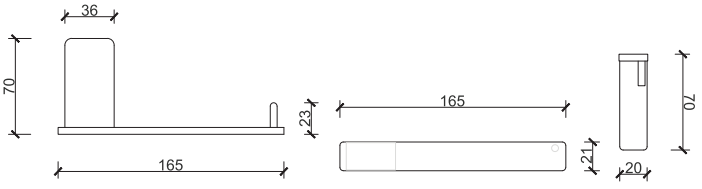

rhône soap dish

code: 210765

description: soap dish, solid brass, chrome plated.

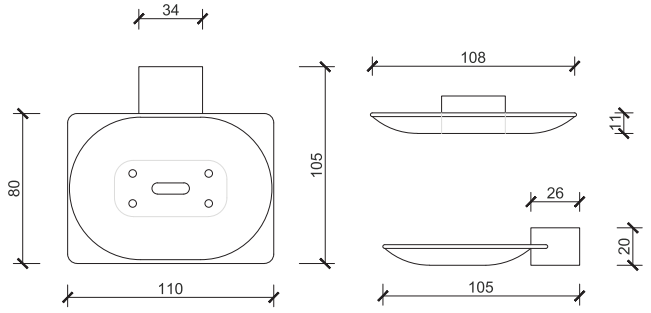

rhône tumbler holder

code: 210764

description: tumbler holder, solid brass, chrome plated.

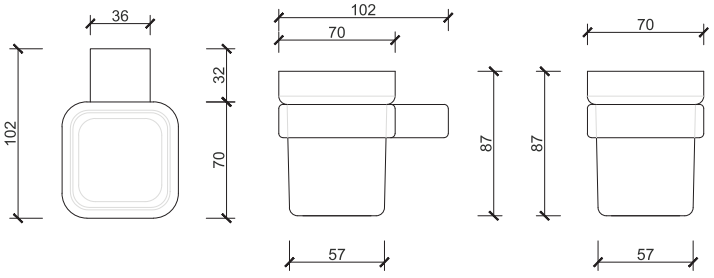

rhône toilet brush holder

code: 210763

description: toilet brush & holder, solid brass, chrome plated.

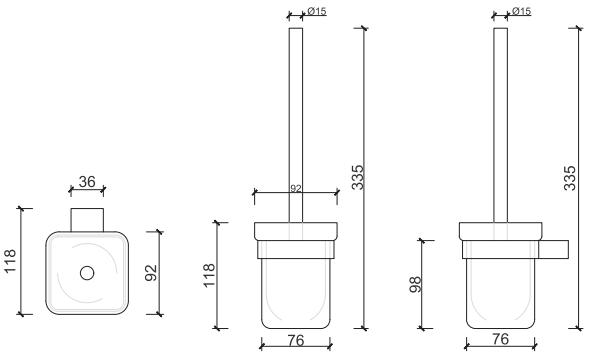

monaco single towel rail

code: 210777

description: single towel rail, solid brass, chrome plated.

measurements: 600mm

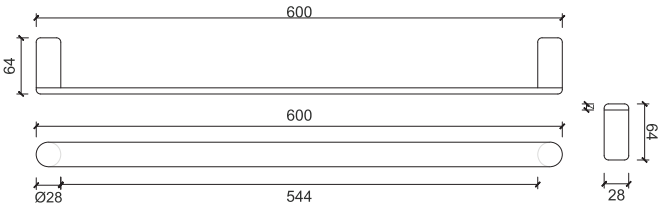

monaco double towel rail

code: 210778

description: double towel rail, solid brass, chrome plated.

measurements: 600mm

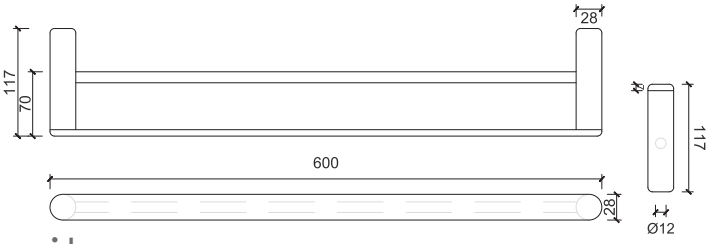

monaco double towel rail

code: BIJ211126

description: double towel rail, solid brass, chrome plated.

measurements: 900mm

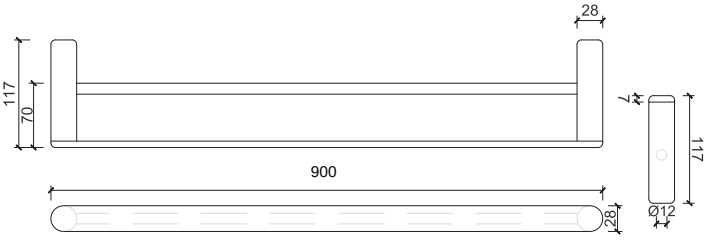

monaco hand towel rail

code: 210880

description: towel rail, solid brass, chrome plated.

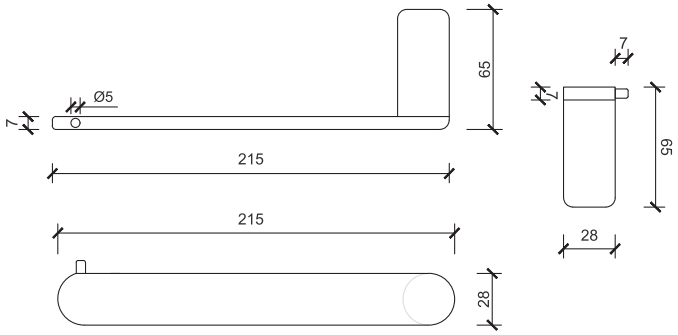

monaco robe hook

code: 210884

description: robe hook, solid brass, chrome plated.

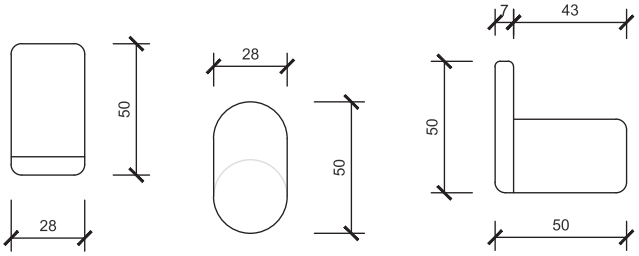

monaco toilet roll holder

code: 210885

description: toilet roll holder, solid brass, chrome plated.

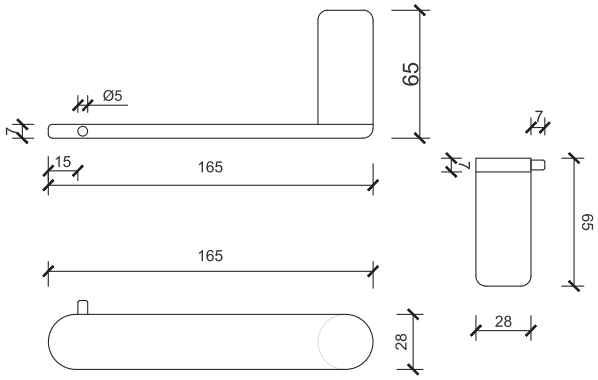

monaco soap dish

code: 210883

description: toilet soap dish, solid brass, chrome plated.

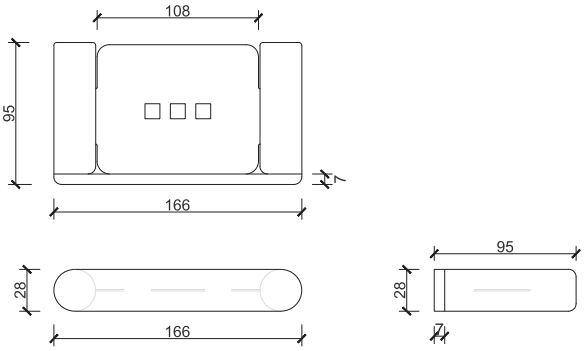

monaco steel shelf

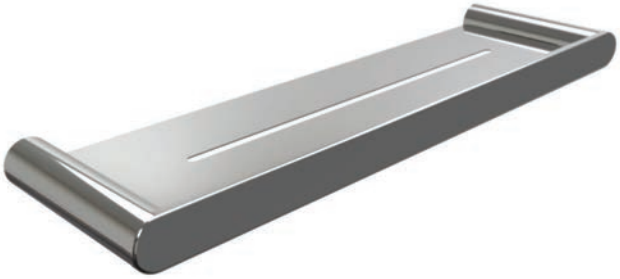

code: 210779

description: stainless steel shelf, solid brass, chrome plated.

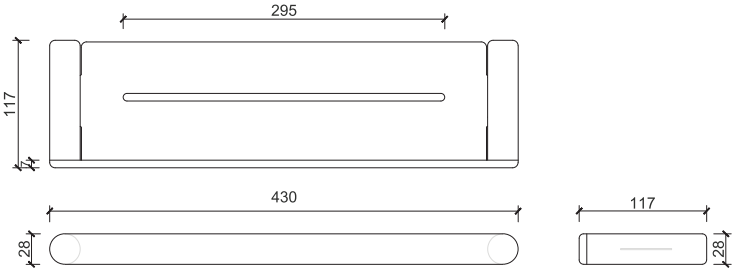

monaco tumbler holder

code: 210882

description: tumbler holder, solid brass, chrome plated.

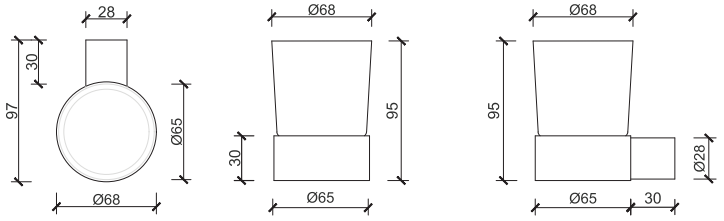

monaco toilet brush

code:	210881
description:	toilet brush & holder, solid brass, chrome plated.

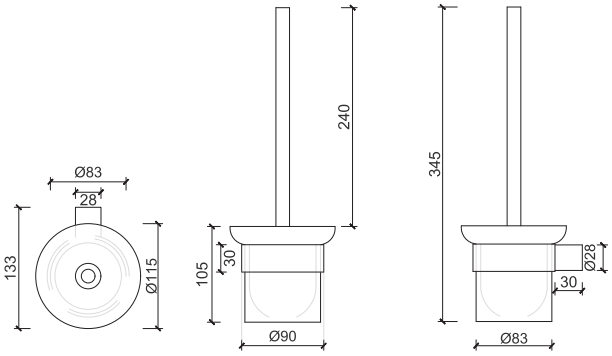

basin waste

code:	211215
description:	matt black basin waste pop in, unslotted.
measurements:	32mm Ø

basin waste

code:	211144
description:	matt black basin waste pop in, slotted.
measurements:	32mm Ø

bath waste

code:	211145
description:	matt black bath waste pop in, unslotted.
measurements:	40mm Ø

basin waste

code:	211146
description:	vintage bronze, domed pop in, basin waste, slotted.
measurements:	32mm Ø

bath waste

code: 211147

description: vintage bronze, domed pop in bath waste, unslotted.

measurements: 40mm Ø

angle valve

code: 211217

description: rosette, matt black.

angle valve

code: 210753

description: solid brass round rosette, chrome plated.

angle valve

code: 210754

description: solid brass square rosette, chrome plated.

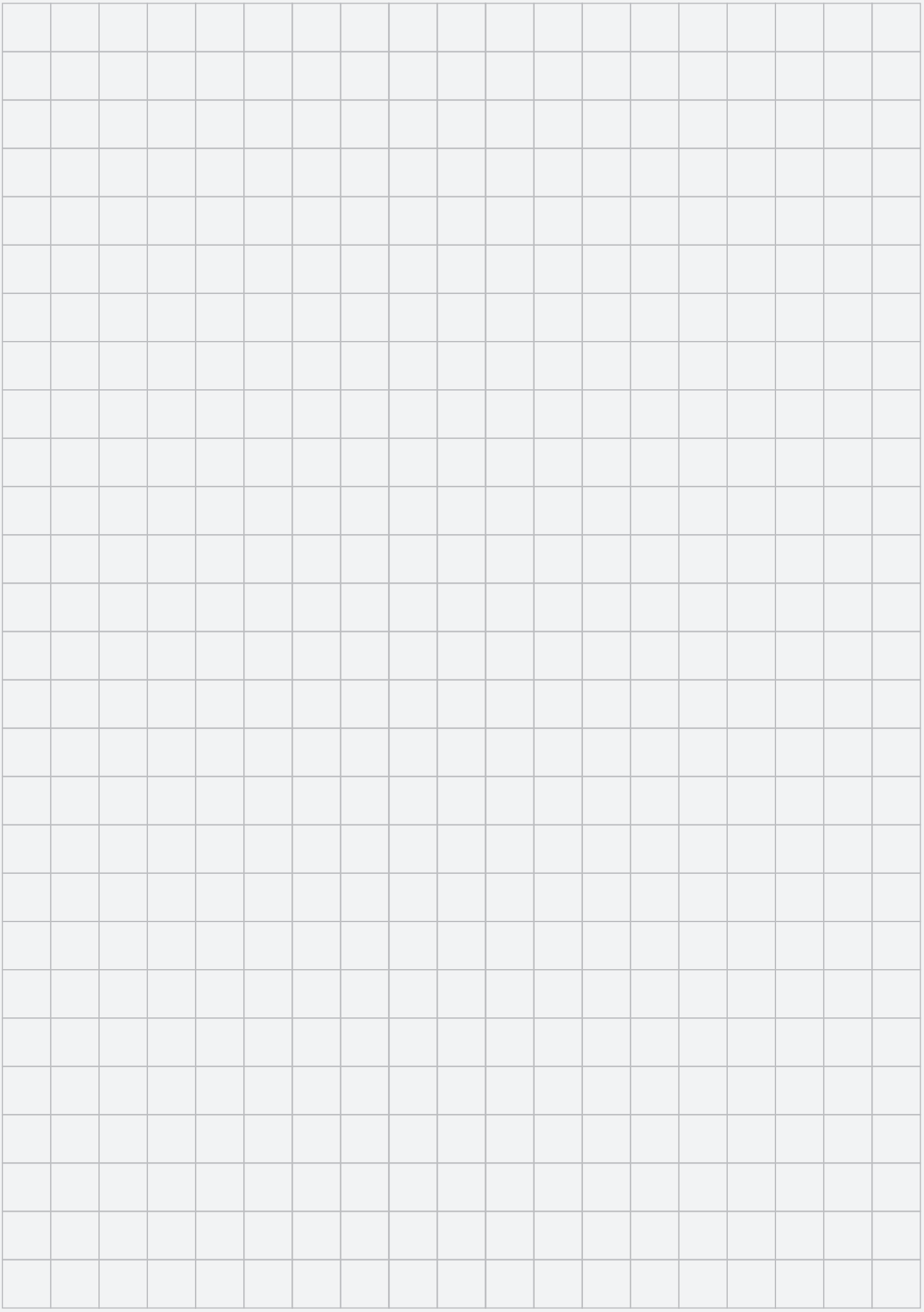

B I J I O U

quality guarantee

BIJIOU warrants its sanitary ware, taps and accessories against manufacturing defects, craftsmanship and quality. All products meet ISO 9001 standards. (The manufacturer's liability is limited to repair or replacement of the product if defective in the opinion of the manufacturer or representative. Original proof of purchase will need to be provided.

tap collection

sanitary ware collection

bathroom accessories

care and maintenance

All of our products are stain resistant as well as our sanitary ware is resilient to micro-organism and bacterial growth, allowing for simple care and maintenance. Wipe with liquid detergent or multipurpose cleaner. Any product will be damaged by aggressive chemicals such as trichloroethane or methylene chloride as found in paint stripper. Do not use highly abrasive sponges or cleaning products containing scouring granules. Enjoy luxury made simple.

BIJIOU

www.bijiou.co.za