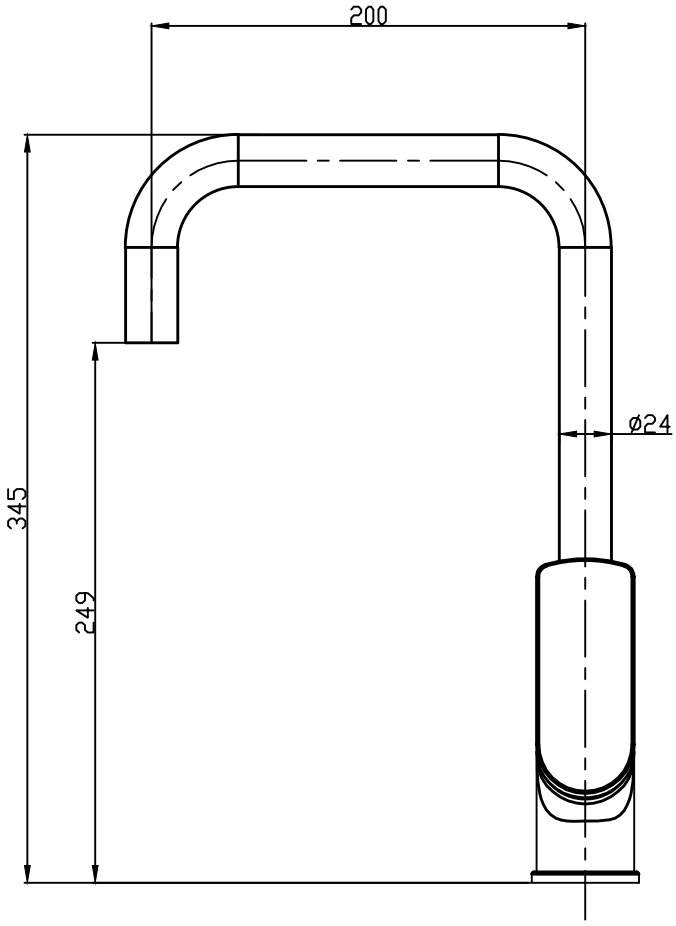
200
345
249
ø24

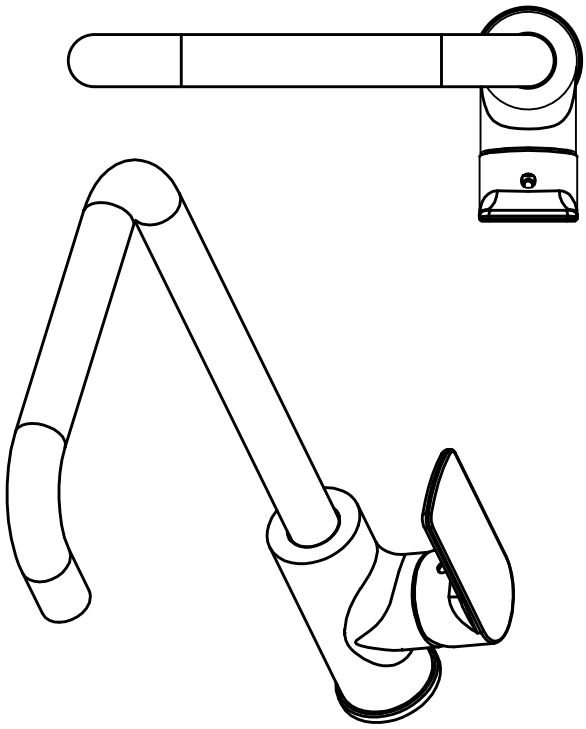

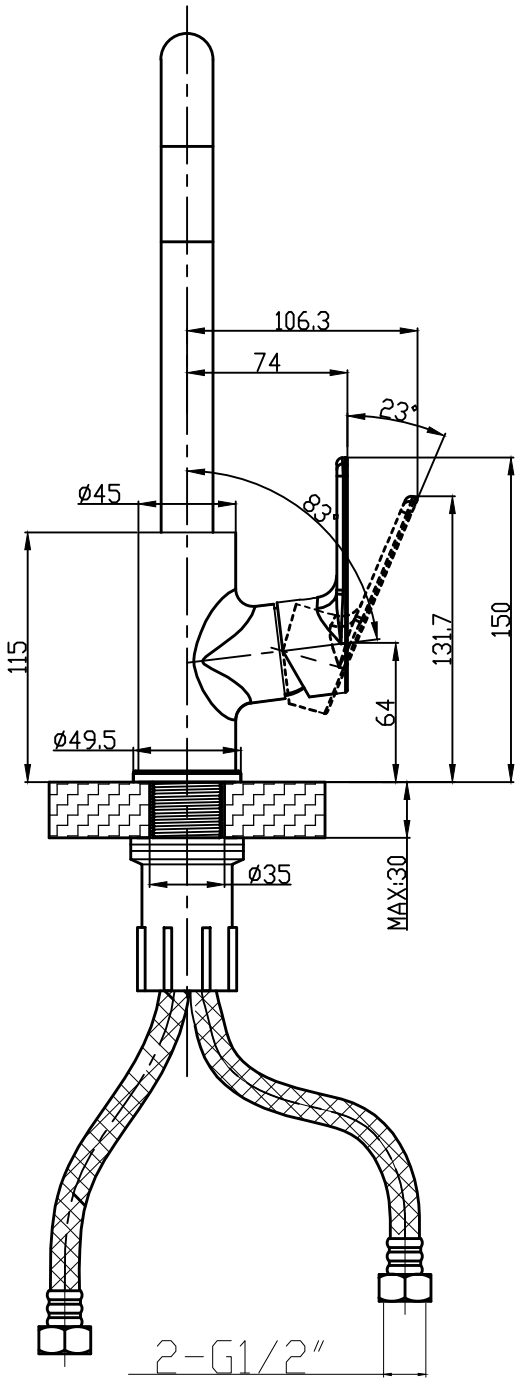
106.3
74
23°
ø45
83°
115
131.7
150
64
ø49.5
ø35
MAX:30
2-G1/2"