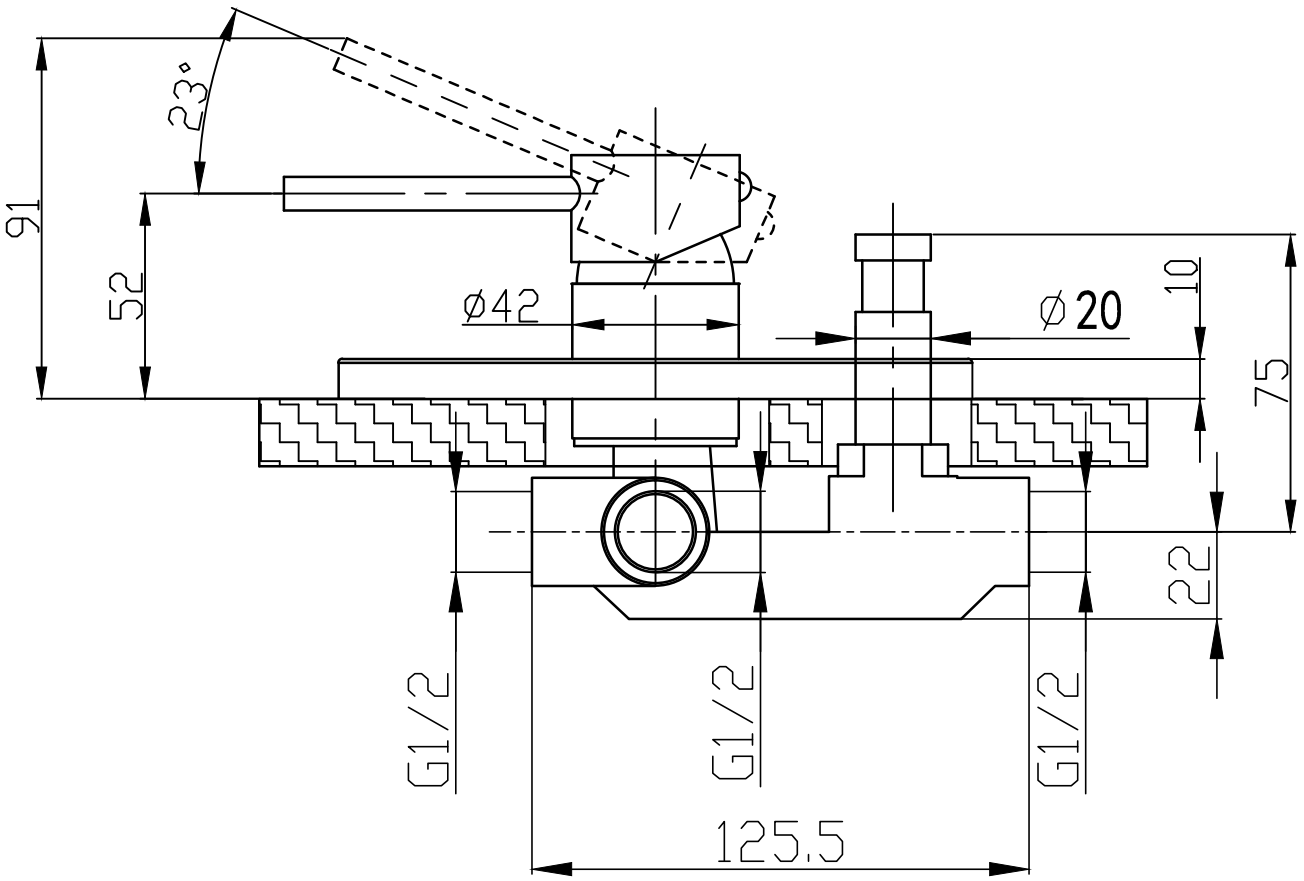
23°
91
52
ø42
ø20
10
75
22
G1/2
G1/2
G1/2
125.5

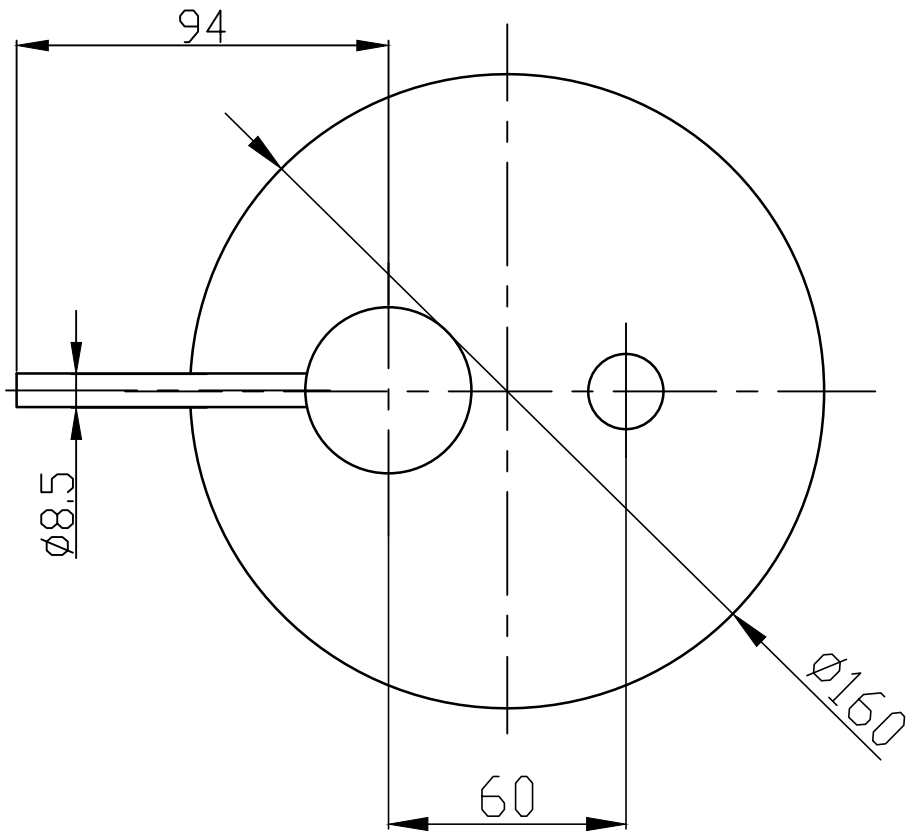
94
ø8.5
ø160
60